Flábiá™
FRESH

MY SUCCESS PLAN

Welcome to the Home of Business

Dear Members/Readers,

Welcome to the "Home Of Business" to Flabia Fresh family.

I would like to take this opportunity to congratulate you for your much-valued contribution in our success. While marketing is the engine driving your business, a marketing plan is the road map guiding your business. Think of the marketing plan as the "GPS" unit for you and your business strategy—a necessary tool carefully outlining detailed, "turn-by–turn" directions to help you reach your desired destination.

Regardless of opportunity, you need a marketing plan, so as we are here to help you deliberately. Some business partners choose to outsource, while others develop it in-house. This message is designed to help and guide you in, in-house marketing team in developing a viable plan for your business.

Here in Flabia Fresh family, we give you the opportunity to make your own decisions, design your destiny and set your own standards in a world where you are your own boss. I can assure you that if you join us you can grab a better life for you and for your family. You can set a goal for the betterment of your present and upcoming future. Here, we also reward your hard work which u deserve. Business Scenario :

Flabia Fresh was established in the year 2014. Let me also tell you that it's not difficult to achieve your goal at all. For this you need to follow the "Business Enrichment Plan" and to understand the opportunity that will lead you to build a new and exciting life ahead. As the "Business Enrichment Plan" will make crystal clear as we offer enormous opportunities for you in terms of gaining HEALTH/WEALTH/RESPCT/STATUS/POSITION in a society by providing them through the effectiveness of the wellness products.

I want to end my message saying that "Take this exciting opportunity to get in on the ground floor of a company with unlimited growth potential." In your success lies ours too as our motto itself says "Flabia Fresh – For you…….For Ever".

Best Wishes,

CMD

M Y B U S I N E S S P L A N

SUCCESS MANTRA

You can enrich yourself & your family by enriching others & their family. Multiple income based on Performance will be provided by the plan, and further will be clubbing the performance of your downline. The more your downline makes progress, the more your progress will enhance. Do read the Business Enrichment plan & do understand the opportunity to enable you to build a new future.

To become a successful entrepreneur in your Flábiá FRESH business, you need to follow the following steps :

- Be a regular user of products
- Earn by sharing the products
- Enrich by sharing the business
- Enrich yourself by inspiring others

LUCRATIVE MARKETING PLAN

1) Retail Benefit : 10% - 30%
2) Accumulative (Self + Team) Performance Bonus : 5% - 20%
3) Matching Compensation Bonus (Weekly) : 20%
4) Director Bonus (Monthly) : 10%
5) Leadership Matching Bonus (Monthly) : 6%
6) Travel Fund (Monthly) : 2%
7) Car Fund (Monthly) : 4%
8) House Fund (Monthly) : 3%
9) Royalty Bonus(Yearly) : 4%

1. RETAIL BENEFIT: 10% - 30%

You can earn this benefit by sharing to other consumers. It is represented by the difference between the distributor price and M.R.P.

For example:

M.R.P	D.P	Retail Benefit
Rs. 450/-	Rs. 350/-	Rs. 100/-

To get no. 2 to 9 Bonus a Distributor must have a minimum personal purchase of 300BV (500BV for Director & above) Distributor price.

2. ACCUMULATIVE (SELF + TEAM) PERFORMANCE BONUS (APB) : 5% - 20%

Once your team business volume gets accumulated over month, everyone can achieve upper rank and that too forever. Such rank is not going to change for lifetime.

BONUS CHART

DISTRIBUTOR	50 -7500 BV	5%
DISTRIBUTOR	7501 - 25000 BV	8%
DISTRIBUTOR	25001 - 50000 BV	11%
SR.DISTRIBUTOR	50001 - 100000 BV	14%
ASST.DIRECTOR	100000 - 150000 BV	17%
DIRECTOR	150001 BV+	20%

Note :

PBV = Personal Business Volume.
PGBV = Personal + Group Business Volume
BV = Business Volume
DP = Distributor Price
MRP = Maximum Retail Price

For example : If your rank as an asst. Director (17%) then your APB Income will be following.....

You will qualify for 17%. So, you get 17% of 4500 BV = Rs. 765.00

A is qualified for 5% you get 17-5 = 12% of 6000 = Rs. 720.00
B is qualified for 8% you get 17-8 = 9% of 12000 = Rs. 1080.00
C is qualified for 8% you get 17-8 = 9% of 18000 = Rs. 1620.00
D is qualified for 8% you get 17-8 = 9% of 25000 = Rs. 2250.00
E is qualified for 11% you get 17-11 = 6% of 35000 = Rs. 2100.00

TOTAL = Rs. 8535.00

Rs 8535.00 is your earning for the month.

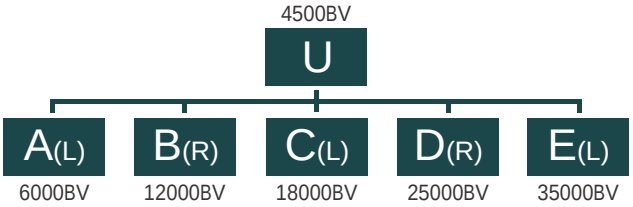

Your Personal Product Purchase in a month	-	4500 BV
Your Front line A has purchase in a month	-	6000 BV
Your Front line B has purchase in a month	-	12000 BV
Your Front line C has purchase in a month	-	18000 BV
Your Front line D has purchase in a month	-	25000 BV
Your Front line E has purchase in a month	-	35000 BV

Total Personal Group BV(PGBV) = 100500 BV

FAST TRACK APB

Achieve Director Rank only when 1,00000 BV is made.

Fast Track APB for those who want to achieve fast Director Rank.

Condition :

If any Distributor Self + Team accumulative purchase, will reach thre DP Volume to 1,00000 BV with in 30 days, from the date of registration, then that Distributor will achieve a Director rank.

3. Matching Compensation Bonus (Weekly) : 20%

This Bonus will be applicable for the pay group, & the rest business volume will be carried forward for next week payout. Matching Bonus @ 20% total turnover of the company's weekly business volume. Left 500BV : Right 500BV = 1 Matching point.

$$\frac{\text{20\% of total company's turnover}}{\text{Total matching point collected}} = \text{1 matching point vallue}$$

Matching Example

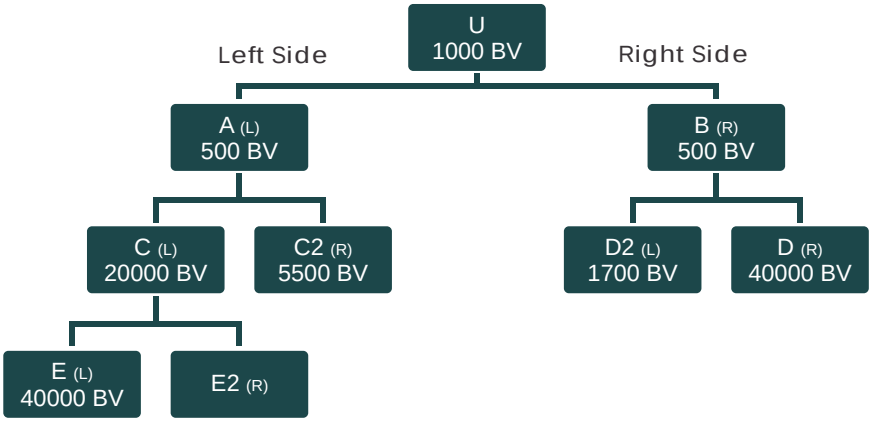

Total turn over in this picture

1000 + 500 + 500 + 20000 + 5500
+ 1700 + 40000 + 40000 = 109200 BV

Company's Total turn over 109200 BV
Total BV 109200 in a week X 20%= Rs. 21840
Matching Bonus Value= Rs. 21840 ÷ Total Matching Unit
Total Matching Unit = 720 (assumption)
Matching Per Unit : Rs 33.33
Your Business Volume : Left Side - 66000
Right Side - 43200

Your Total Matching BV = 43200
Left Side Carry Forward = 66000-43200 = 22800 BV
Your Total Matching Unit > 43200 ÷ 500 BV = 86.4 Unit
Your Matching Bonus Income= 86.4 X 33.33 = Rs. 2879.71

4. Director Bonus (Monthly) : 10%

Your Business Volume (BV) gets accumulated month over month, so its every one possible can achieve for the rank forever.

$$\text{DB Value Per Point} = \frac{\text{10\% of Co's Monthly BV}}{\text{Total DB Points Collected Nationally}}$$

Rank Status	DQD	PBV	P+NQG BV	YOU	Qualified Level 1	2	3	4	5	6	7	8	9
Director (D)	–	500	30000	6%									
Bronze Director (BD)	1	500	24000	6%	5%	4%							
Silver Director (SD)	2	500	18000	6%	5%	4%	3%						
Gold Director (GD)	3	500	12000	6%	5%	4%	3%	2%					
Diamond Director (DD)	4	500	6000	6%	5%	4%	3%	2%	1%				
Crown Director (CD)	6	500	NIL	6%	5%	4%	3%	2%	1%	.5%			
Double Crown Director (DCD)	9	500	NIL	6%	5%	4%	3%	2%	1%	.5%	.5%		
Triple Crown Director (TCD)	12	500	NIL	6%	5%	4%	3%	2%	1%	.5%	.5%	.5%	
Universal Crown Director (UCD)	15	500	NIL	6%	5%	4%	3%	2%	1%	.5%	.5%	.5%	.5%

DQD = Direct Qualified Director
P+NQGBV = Personal + Non Qualified Director's (Members) Group Business Volume

* P & NQGBV should maintain as shown as the Rank Status Chart.

Let's assume that you have a downline 'X' who has sponsored downline 'Y'.

Downline Y does PGBV of 1,50,001.

You and your downline 'X' are P+NQGBV of 30,000 each in this particular month.

As a qualified Bronze Director you are now entitled for director Bonus as shown below :

6% on PGBV	= 30,000 X 6%	= 1,800 points
5% on PGBV of Director 'X'	= 30,000 X 5%	= 1,500 points
4% on PGBV of Director 'Y'	= 1,50,001 X 4%	= 6,000 points
Total points colleted	= 1,800 + 1,500 + 6,000	= 9,270 points

This example will show how the Director Bonus Points (DB) are calculated. Kindly note that these are assumptions. Actual earnings can be different depending upon business generated by you and your team.

** To get DB you have to maintain your Directorship.

Suppose the company's 10% Business Volume for the month is 40,00,000 and DB point collected throughout the country by various levels of Directors is 45,00,00, Then the calculation of DB point value will be, as shown below:

$$\frac{\text{10\% of Company's Monthly BV}}{\text{Total DB points collected Globally}} = \frac{40,00,000}{45,00,000} = 0.88 \text{ (This is the value of DB points)}$$

So, Your Director Bonus > 9300 X 0.88 = 8184

5. LEADERSHIP MATCHING BONUS (MONTHLY) FOR QUALIFIED BRONZE DIR. & ABOVE : 6%

1,00,000 BV :1,00,000 BV = 1 Unit

For example:

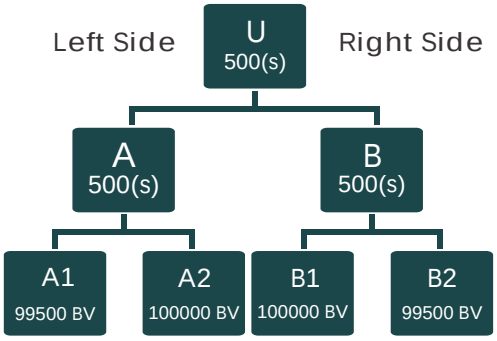

U = 2 Units
A = 1 Unit
B = 1 Unit
U + A+ B = 4 Unit

Company's total monthly turn over 4,00,500 BV.

* Power side will be carry forward.

Total BV 4,00,500 in a month X 6%= Rs. 24030
Total Matching Unit = 4

Matching Unit Value = Rs. 24030 ÷ 4 = 6007.5
Matching Per Unit : Rs. 6007.5

Your Business Volume : Left Side - 2,00,500
Right Side - 2,00,000

Your Total Matching Unit:2,00,000BV : 2,00,000 BV = 2 Unit

Your Matching Bonus Income (6007.5 X 2) = Rs. 12015

Carry Forward Left Side 500 BV

$$\text{Matching Unit Value} = \frac{\text{6\% of Co's Total Monthly BV}}{\text{Total Matching Unit Collected Nationally}}$$

6. TRAVEL FUND (TF) Monthly : 2%

Travel fund is provided to Bronze Director and above. It is based on Point Sharing System.
Travel Fund allocates 2% of total Co's Monthly Business Volume. Travel Fund values per point which may vary each month and is computed on monthly basis as per below shown formula:

The Travel Fund is based on Director Bonus Qualification.

$$\text{TF Value per point} = \frac{\text{2\% of Co's Total Monthly BV}}{\text{Total TF Achiever's DB Point Collected Nationally}}$$

- The Travel Fund can only be used for Travel Trips announced by the Company
- The Travel Fund is not Encashable.

7. CAR FUND (CF) Monthly : 4%

Car Fund is provided to Gold Directors and above. This is also based on Point Sharing System.

$$\text{CF Value Per Point} = \frac{\text{4\% of Co's Total Monthly BV}}{\text{Total CF Achiever's DB Point Collected Nationally}}$$

To Qualify for Car Fund :

- A Director must have 3 Gold directors from different wings from his downline.
- To enjoy the benefit of car fund he/she has to maintain the above mentioned condition for minimum of three consecutive months. And from the fourth month onwards, he/she will be eligible for car fund.
- Rs. 50,000/- per month is the maximum limit that he/she can earn in car fund.

8. HOUSE FUND (HF) Monthly : 3%

Flabia Fresh also provides House Fund to the Crown Director and above. This is also based on point sharing system. The Co. allocates 3% of Total Co's BV.

$$\text{HF Value Per Point} = \frac{\text{3\% of Co's Monthly BV}}{\text{Total HF Achiever's DB Point Collected Nationally}}$$

To Qualify for House Fund :

- Must have Monthly Personal Purchase of 500BV.
- Must have 6 Directors from different wings through his downline.
- To enjoy benefit of house fund, he/she has to maintain the above mentioned condition for minimum of three consecutive months. And from fourth month onwards he/she will be eligible for house fund.
- Rs. 1 Lac per month is maximum that he/she can earn in house fund.

9. ROYALTY BONUS (Yearly) 4% :

- Royalty Bonus for Crown Directors & above.
- To get this Bonus, one must achieve at least 30 Qualified Director's Points from minimum 3 different wings in a financial Year (April-March).

1QDP = One Qualified Director Point

Royalty Achiever Category	Achievers QDP	Share of Percentage
RBA1	30 to 59	2%
RBA2	60 to 89	1%
RBA3	90 to 119	0.50%
RBA4	120 to --->	0.50%

$$\text{For RBA1 Value per QDP} = \frac{\text{2\% of Total BV of the year}}{\text{Total RBA1 Achievers QDP}}$$

For RBA2, RBA3, RBA4 Value per QDP will be calculated according to the percentage table.

QDP = Qualified Director Point

RBA = Royalty Bonus Achiever

F L A B I A P O L I C Y

Product Return Policy upon resignation

The Company provides a Product Return Policy to the Distributor, who wills to resign from his/her Distributorship. Also the Company provides Product Return Policy to those Distributor's who wants to return any product of the Company (Flabia Fresh Pvt. Ltd.), but here lies the criteria for the above mentioned statement for return of product(s) which are, products must be in good condition (useable, resalable, restock-able, unopened, unaltered & most important is the shelf life of the goods). Must have product invoice of those product where one's will tend to return, & that product invoice should be from the date of purchase.

Upon approval for refund OR on any return, 10% of the cost of the product will deducted. And the remaining 90% will be refunded back.

The Product return Policy is designed to impose upon the sponsor and the Company's obligation to ensure that the distributor is buying products wisely. Distributors are requested to buy products that they can reasonably sell within 30 days period.

Flabia Product Guarantee

Flabia (hereinafter called the Company) offer product's of international quality to every customer. If the product purchased by the distributors or consumers are of inferior quality or with manufacturing defects, the Company guarantees replacement. However, this guarantee does not extend to damages or contamination due to expiry, negligence or deliberate act.

Flabia Product Return Policy

In case of any dissatisfaction, manufacturing or packaging defect, retail customers can return/exchange the product to/from the distributor from whom they had purchased the same, within 30 days from the date of purchase . They have to provide a written application having a valid and good reason which can return the said products along with the original customer's order receipt copy. In case of retail customers, request for money refund or replacement of products, it is the distributor's obligation to satisfy the customer's need/criteria.

Thereafter, the distributor can exchange the products from the Company within 30 days from the date of issue of invoice and that invoice must be submitted at the time of exchange.

- Product Return Form / QVR (Quality Variation Report)
- Reason for Return
- Copy of Invoice
- Copy of Customer Order Receipt
- Products to be Returned

Flabia Sale , Marketing & Promotion Policy

The Company developed as follows it's own policy for promotion, advertising, ' sale and marketing of this product. The Distributor's services are only to implement such policy. Under no circumstances, Distributor's are allowed to alter or formulate policies, However, Distributors and staff are encouraged to provide inputs and suggestion for the Company's consideration. Company does not allow it's products to be stored, displayed or sold in wholesale or retail outlets in public or private places. If such act occurs, every Distributor is requested to report for it along with the details of the liable Person/Distributors and its circumstances.

Sale and purchase of the Company's products amongst Distributors and Staffs of the company is not permissible, upon detection of such act strict action shall be taken against the persons involved. Sale of products at price(s) and in packages other than the one's determined and implemented by the Company is strictly prohibited. Acts of sale of products at price(s) other than the prescribed prices for competing with other Distributors or otherwise shall be seriously viewed; in such cases Company may terminate Distributorship of the person(s) found responsible for such act and forfeit their bonus entitlement / arrears.

Up line & Downline reporting policy

Though in general course of business, all distributors are expected to report to their Upline and guide their Downline as per mutual convenience and situational demands. All distributors are required to report 'extra ordinary situations' directly to the Company and seek guidance.

Distributors are not allowed to carry out their own promotion unless they have written approval from the Company for the same. The Company designs, prints, publishes and circulates product, plan and vision related literature for promotion, marketing and sales of its products. Distributors are not allowed to deviate there from. Under special circumstances, the Company may allow Distributor(s) to cause customized literature and / or advertisement. However for this purpose, interested Distributor(s) shall have to submit a detailed plan in advance to the Company for its approval. Unless written approval is given by the company, none can digress from the content of the company's literature / policy for promotion, marketing and sales.

On expiry or termination of distributorship, the distributor shall remove and discontinue using Company's sign, logo or any other representations, and also shall not use any name, sign, label, stationery & products, If the above condition is violated, the Company in its discretion may take legal re-course against the errant distributors.

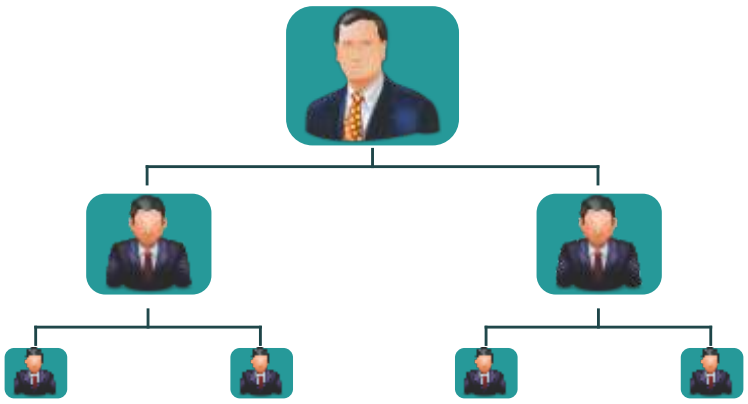

Reward / Reconciliation / Vacancy policy

In case of vacancy in distributorship caused due to death (with no heir / nominee), and in cases of resignation, termination, cancellation, inactive distributorship, unclaimed distributorship of Gold and above, the Company shall auction the network linked with such vacancy amongst existing Gold Distributors or higher levels, resulting the highest bidder will get such network. The network so purchased will remain in its existing position in the line of sponsorship and shall be known as authorized distributorship business of the auction purchaser. Funds realized through aforesaid auction may be distributed amongst as per the Company's guidelines as may be in vogue at the relevant point of time.

In case, the Company doesn't get any buyer for the network linked with any vacant distributorship, an administrator will be appointed to conduct business of the network and to supervise the network efficiently. Only after that the Company is satisfied about smooth management and growth of such network amongst leaders who are working under the distributors, whose network was being administered, or in a manner which the Company feels will be in the best interest of Business. Company's decision with regard to this policy will be final.

Flabia Communication Policy

Our corporate identity and stationery is fundamental to the way we communicate. It is the way we present ourselves to customers. These are our vital asset reflection, our brand image, unifying all our operations and providing a recognizable endorsement of quality. Our identity and stationery provides us with consistency and recognisability. But we must have the discipline to ensure that our corporate identity standards are maintained. It's about ensuring the future reputation of our Company and it is a job that comes down to all of us. We have prepared a stationery template for you. This template is designed to help you to endorse the Flabia brand. It is recommended that a unifying corporate identity card of Flabia that can be used for all your business transactions. You must ensure that the font, type size, colours, spaces and other details are consistent with Flabia's standard.

Flabia code of ethics

Distributors are required to observe the Flabia code of Ethics at all times. The Company reserves the right to terminate distributorship at any time for any violation. Upon enrollment, distributors are expected to pledge the following :

1 Distributor will follow the highest standards of honesty and integrity in the Flabia Business.

2 Distributor will present the Company's marketing plan accurately and honestly, clearly portraying the level of effort required for achieving success.

3 Distributor will not make any negative or disparaging remarks about the Company, its products, employees or any other people associated with company. He / She will be respectful to the Company's norms as well as the direct selling Business.

4 Distributor will not retail the products of Flabia through retail outlets.

5 Distributor will not instigate, encourage, indulge or guide down lines for bonus rebate and refund of commission in order to become more competitive on pricing.

6 Distributor will strive to ensure that the customers are satisfied with the Company's products and his / her service.

7 Distributor will not use the Company's trade name(s), information, literature, advertising material, and gathering of people or any other resources including intellectual property, to introduce and promote interests of any entity other than the company.

8 Distributor's will be abided by the Flabian's distributor's Rules and Regulations/Norms all time.

9 Distributor will not resort to any fraudulent act in promoting the Company's business at the expense of the Company and fellow Distributors.

10 During continuation and thereafter, Distributor will not do anything that may adversely affect the Company and its reputation and business.

R U L E S & R E G U L A T I O N

The following Rules & Regulation of Flabia Fresh (the Company) are formulated and implemented for safeguarding right and dignity of the Distributors while regulation conduct of business. In order to mould yourself as a responsible and ethical distributor of Flabia, one must understand and be abide by the policies of the Company and its Rules and Regulations. Any violation of the same can result in termination of your distributorship.

The Company reserves the right to amend its Policies, Rules and Regulations/Norms without causing prior notice or clarification. You are expected to browse the Company's website from time to time and keep yourself abreast with updated policies, rules and regulations.

1.Eligibility criteria to become a Distributor

I) Individuals :

a. Individuals aged 18 years and above can apply to be a distributor of the Company.

b. The Company has absolute discretion to decide whether to accept or reject an application.

c. Distributor of the company is not an agent, representative or employee. The relationship is based on principal to principal.

d. All applications must be sponsored by an existing distributor.

e. Wife and husband constitutes a single unit for the purpose.

F. Son or unmarried daughter of a Distributor can join the Business with their independent ID if the line of sponsorship is under their family ID, Similarly any of the family member can join under their son / unmarried daughter.

Partnership firms, LLP. Company, Society and Trust):

a. In such cases registration shall be in the name of the legal entity.

b. A copy of the constitution, deed, articles of the association along with certificate of institution / incorporation, as may be applicable for the entity and PAN CARD should be submitted along with the application form. In case of HUF, copy of PAN CARD would suffice.

c. Liability and entitlement of such entity is as per law of the land Bonus payment which would be made by the company in the name of the entity.

d. Any change in constitution of the entity should be intimated to the Company and a fresh application form should be submitted along with the new / updated constitution. Company reserves the right to refuse registration of such new / fresh composition or constitution.

e. Company will communicate only with a person / official duly authorized by the entity under written intimation to the company in advance.

f. In case of dissolution / winding up / insolvency of the entity bonus entitlement / arrears, if any shall be released to the successor entity upon submission of proof acceptable to the company. Claim(s) in this respect shall not be entertained after 90 days from the incident of dissolution / winding up or declaration of insolvency.

2. Payout policy

a. Bonus for all distributors is computed weekly, monthly & yearly and commensurate with the business done in the relevant Sales month. Pay outs will be issued by the Company to the registered distributor.

b. On receipt of payout Distributors should check accuracy of computation. Any queries in this respect should be made within 14 days from the date of issuance of payout by the company in the absence of such queries the figures mentioned in the statement shall be final and binding.

c. Distributors are required to provide their addresses and bank particulars and update the same when any change takes place. Company shall not be liable for non-receipt of payout due to change in address of e-mail id, or bank particulars.

3.Procedures for violation policy

The company provides guidance and advice to deal with situations involving breaches and violation of its policies and the rules and regulations. The company shall also take appropriate action against the Distributor's involved. In the event of any violation, the following procedure needs to be observed:

a. A complaint has to be lodged immediately upon coming to know about violation of any and all policy, rules and regulations. The complainant must fill in the Customer Feedback Form by giving details of the alleged violation, also he / she requires to inform his / her up line about the complaint.

b. Upon receiving the complaint, company shall immediately notify the Distributor involved requesting a swift response by way of a chance to explain his / her case. Company may in appropriate case institute such action sue motto.

c. In case of inadequate information the company may request for more details from either party.

d. If the Company is convinced that the only way to restore normalcy is to suspend or terminate distributorship, it shall convert its decision by writing a letter to the distributor concerned. The letter shall be posted through registered mail / courier to the last known address of the Distributor as listed in Company's database and the post-mark shall be taken as proof of receipt. The company reserves the right to take necessary action against the terminated Distributor including seeking compensation, recovery, damages and legal costs incurred if any. However the company reserves the right to amend or modify any part of the above decision if and when such a need is felt by the company.

4. Renewal of Distributorship

The company dose not change any renewal fee. Distributorship is discontinued, if the Distributor resigns and if the resignation is accepted by the company or the Distributorship is terminated by the company. If the Distributor does not conduct any business with the Company for more than three years the Distributor will lose lien over the company.

In the above cases, the Distributor will be required to put forth his claims within one month of the date of the above happenings. Thereafter no claim will be entertained. The claims will be settled as per Company's policy.

5. Valid ID

The distributor who joins the Company must do business of at least 300 BV within 30 days of joining for his ID to be valid. IF the same is not done the ID of the Distributor will be treated as invalid after the period of 30 days.

6. Representations made by Distributors

a. Distributor(s) shall not exaggerate or misrepresent benefits associated with the company association with the company and the company's products and services.

b. Distributor(s) must know and convey that earnings come only through hard work through commitment and consistent effort.

c. Distributor(s) shall not make claims other than what mentioned in the company's plans and literature about product, quality and earnings. Company has the unconditioned rights to take any and all action including seeking damages for distributor's action/ inaction, inviting and causing ill repute / loss to the company for mis declaration or misrepresentation.

7. Packaging and Pricing

The product description, labeling, pricing and packaging done will be determined by the Company as final and sacrosanct. No alteration is permissible in these respect. Distributor(s) are not authorized to reliable, re-pack and alter description or sale products loose or in a form which is not originally created/fixed by the company or at a price not fixed by the Company. Allegations against Distributor(s) for contravening this rule shall be investigated and appropriate/strict action will be taken accordingly.

8. Cross team sponsoring policy

No Cross Sponsoring of Distributorship shall be allowed "Cross Sponsoring" in this context is defined below :

A. Signing up an existing Distributor from another group.

B. Signing up the wife when husband is already a Distributor or vice versa.

C. Signing up under another sponsor to operate his / her Distributorship, when his / her Distributorship is still valid.

D. Allowing other people or relative to use his / her Distributorship to do business.

E. If son or unmarried daughter joins the Business with their own ID, but their line of sponsorship is not under their family, ID then in such case it will be treated as cross sponsoring & the ID taken by son / unmarried daughter will be terminated. Same will be applicable for any of the family member those not joined who have under their son / unmarried daughter's line of sponsorship. In the event of Cross sponsoring the following action shall be taken :

F. action shall be taken :

I) If the complaint is received constantly for more than 6 months of a Distributorship taken, another ID for the same will not be entertained. On receipt of such complaint the Company will terminate one of the ID's of the Distributor which ever may be deem fit and the network will remain with the active ID.

II) If the company receives complaint within 6 months of Cross sponsoring the Company will terminate the second ID of the Distributor and the network developed under the second ID will get terminated .

However if the investigation reveals, that any of the ID's registered was in such a manner where the management finds out is not ethical / without the knowledge of the Distributor then Company will terminate any one of the ID's which they deem fit and the network of do the terminated ID will move upon to the next higher Distributor, the company will take action against the Distributor who managed to register ID in unethical manner.

The company reserves the right to terminate the offended distributor as its own discretion and withholds bonus payment of the offended Distributor till final settlement takes place. The Company's decision in the above case will be final.

9. Inactive Distributor

Irrespective of the level attained if a Distributor is found not to have placed any order in preceding Six months than he / she will be termed as an 'Inactive Distributor' and the Company reserves the right to take a decision (including termination) in respect of his /her Distributorship. After completion of inactive period the Distributor can join under any of the Distributor after termination of the earlier ID.

10. Expiry / Cancellation / Resignation / Succession of Distributorship

A. Any Distributor may resign from Distributorship by submitting an application. Acknowledgment of receipt of such communication constitutes resignation. A person who resigns or whose Distributorship is cancelled / terminated may reapply for Distributorship only after lapse of a period of 6 months (cooling period) from the date of resignation / cancellation of his / her last Distributorship. In such case the person cannot have any claim whatsoever over the downline(s) business that he / she had prior to re-apply for Distributorship.

B. In case of Distributor resignation for certain unforeseen circumstances, which will subject to company's satisfaction, he / she may transfer the Distributorship to his / her blood relative only (proper proof and documentation required). In such case, the Applicant will be the blood relative and the co-applicant will be the earlier Distributor or the spouse of the blood relative. Company's decision in this regard will be final.

C. Distributorship in an ordinary circumstances expires upon death or proven incapacity of the Distributor. However, nominee of the deceased upon evincing interest to succeed Distributorship may be allowed by the Company. In case if the nominee does not come forward till 3 months from the date of death or incapacity of the original Distributor, the case may be successor of the deceased upon submitting appropriate documentation and evincing interest to succeed Distributorship may be allowed by the company. However under no circumstances such Distributorship will be entertained after 6 months from the date of death or knowledge of incapacitation of the distributor either from nominee or successor.

D. Distributorship may be cancelled / terminated declared unclaimed or suspended by the Company for the reasons mentioned in the Company's policies and rules and regulations. In such cases the Company takes decision in terms of its reward / reconciliation policy.

11. Marriage

A. The company treats wife and husband as one single unit for the purpose of Distributorship.

B. In dis situation the two independent existing Distributors marry each other, upon marriage both of them are deem to surrender their Distributorship. The distributors who are married to each other shall separately intimate to the Company about their marriage within 30 days from the date of their marriage. Subject to condition of other sub-clauses of this clause one amongst them ought to resign within 30 days from the date of marriage, failing to do will result to cancellation of both Distributorship. Original downline structure of the Distributor who resigns for the reason of marriage in terms of this sub-clause shall remain unchanged. However to maintain relationship with the Company and to conduct Flabia Business, the couple may form a partnership firm in line of the model deed of partnership prescribed by the Company for the purposes of common Distributorship and can submit the same under cover of a joint application seeking Distributorship for such partnership firm within 30 days of their marriage. This partnership will replace the Distributorship of the distributor who dose not resign and the Structure will remain unchanged.

C. Upon marriage amongst two existing distributors and they being given partnership (irrespective of their cadre / level). They shall have a joint bank account and inform such particulars to the Company within 60 days from the date of marriage. The Company upon receipt of such intimation shall payout credit / bonus earned by the partnership him in such account. If the account is not opened no the bonus will be paid out by the Company and the partnership firm will have no lien on the bonus earned for the period. However this sub-rule will not be made applicable for Distributor couple's who are both Gold Director and Car Fund Achiever unless they want such arrangement.

D. If both distributors are Gold Director and Car Fund Achiever, then their individual Distributor ship's may separately be retained at original status. However one amongst the two may resign from Distributorship / Gold Directorship and the couple may apply for single Distributorship through partnership (comprising both of them as partners). This partnership will replace the Distributorship of the Distributor who does not resign and the structure will remain unchanged. In such case Original downline structure of the Distributor who resign for reasons of marriage in terms of the sub-clause shall remain unchanged. Even in this case both of them shall separately intimate the Company about their marriage within 30 days from the date of their marriage.

E. In case such couple does not form any partnership firm within 30 days from their date of marriage or either of them does not inform factum of their marriage to the Company the Company, reserves the right to cause appropriate changes in their downline / network and merge their business(s) of two Distributor ship's into one with conditions as may be deemed appropriate to the Company and / or cancel Distributorship of one or both as per its discretion.

12. Separation

In case of divorce amongst couples having Distributorship through partnership firms, formed as aforesaid benefits of Distributorship and the Distributorship itself shall be apportioned or transferred in such and case may be in terms of the deed of partnership. Such changes in Distributorship of the partnership firm shall be caused by the Company only on completion of 90 days after receipt of the decree of divorce granted by a competent court. The Distributorship of the partnership firm of the couple shall be put under suspension with effect from the date of commencement of divorce proceedings between the couple and during pendency of divorce. Proceedings the company in its discretion may allow a special arrangement (without insisting upon lapse cooling period) to both parties to do Flabia Business separately as freshly appointed Distributors. After the judgment of the Court the suspension of the spouse in whose name the Court has approved for Distributorship to be continued can continue as a Distributor, and the partnership will stand dissolved. In case the judgment is silent on the issue, the Distributorship under partnership will stand terminated. "In cases where marriage couples are Distributor and co-applicant, they file for Divorce the co-applicant will have no right on the Business and the business will remain with the Distributor. Once the Divorce is formalized the name of the co-applicant will be removed from the system"

Distributorship itself shall be apportioned or transferred in this case & may be in terms of the deed of partnership such changes in Distributorship of the partnership firm shall be caused by the Company only on completion of 90 days after receipt of the decree of divorce granted by a competent court. The distributorship of the partnership firm of the couple shall be put under suspension with effect from the date of commencement of divorce proceedings between the couple and during pendency of divorce proceedings the company in its discretion may as a special arrangement allow (without insisting upon lapse cooling period) both parties do Flabia Business separately as freshly appointed distributors. After the judgment of the Court the suspension of the spouse in whose name the Court has approved for Distributorship to be continued can continue as a Distributor, and the partnership will stand dissolved. In case the judgment is silent on the issue, the Distributorship under partnership will stand terminated. "In case where marriage couples are Distributor and co-applicant is they filed for Divorce the co-applicant will have no right on the Business and the business will remain with the Distributor. Once the Divorce is formalized the name of the co-applicant will be removed from the system"

13. Waiver

A. The failure of the Company to exercise any rights stated in the Company Rules and Regulations or in the Distributor Application Agreement shall not constitute a waiver of the Company's rights to demand exact compliance there with.

B. Any waiver by the Company can and shall only be affected in writing by authorized personnel of the Company.

14. Prohibited Act

Distributor shall no :

A. Incur any liabilities or Debt in the name or on behalf of the Company.

B. Enter info modify or alter any contact in the name of the Company.

C. Engage itself or show interest directly / indirectly as agent servant or licensee for sale of any product / goods other than those of the Company in any trade business or profession in competition with the Company.

Glossary of Terms

BV : Business volume is pre-determined for each product and all calculations are based on this volume.

PV : Point value determines % level of achievement.

PS : Personal Sales

PGBV : Personal Group Business volume, is the business volume of your entire group & does not include the business volume of Director group.

Family : Grand parents / parents / self.

Flábiá™
FRESH

"SUCCESS is a JOURNEY not a DESTINATION"

18003131080 | http://www.flabiafresh.com | Info@flabiafresh.com